FH45HC - F50HC - F62HC

Cubic light industrial air coolers

F50HC

F62HC

General information & application

F45HC, F50HC and F62HC are cubic light industrial air coolers for general application in small to medium-sized cooling, freezing and working rooms.

Refrigerants: HFC, CO_2, Brine

Capacity range (SC2 with R404)	5.4 up to 65.2 kW
Air flow	4,600 up to 34,800 m³/h
Min. room temperature	- 35 °C

Design pressure

Refrigerant	Max working pressure
HFC*	24 bar
CO_2	45-60 bar
Brine	10 bar

* Fluid group 2 according to EN 378

Each heat exchanger is leak tested with dry air and finally supplied with a dry air pre-charge. Fitted with schräder valve on the suction connection for testing purposes (only for HFC and CO_2 units).

Coil

High-efficiency coil manufactured from internally grooved Cu tubes and louvered aluminium fins. Standard fin spacings: 4.5, 6.0, 7.5 and 10.0 mm.

Casing

Durable galvanized steel casing, powder coated RAL 9003. Dismountable and openable casing for cleaning and inspecting purposes. Fitted with hinged drain tray.

Fan motors

1 to 4 fans fitted with high efficiency AC or EC fan motors, available in three fan diameters (450, 500 and 630 mm) drawing through the coil.

Options

- Corrosion protection: Alupaint fins (AP)
- Electric defrost (E) - *both in coil and in drain tray, connected to dedicated connection box*
- Hot gas defrost (G) - *hot gas in coil, electrical in drain tray*
- Fan shroud heater
- EC fans (0-10 V) + Modbus
- Fan motors wired to a central connection box
- Fan switches
- Insulated drain tray
- Shut-up sock
- Textile tube adapter
- Air streamer
- Top connections - *for brine models*

Benefits

- Top Performance: advanced high efficiency heat exchanger
- Environment & installation-cost friendly: very low refrigerant charge and EC fans
- Short delivery time
- Even cold room conditions: optimized air flow and throw
- Easy installation and maintenance: fully accessible casing, hinged draintray
- Long life cycle: first class materials used
- Fit for purpose: wide capacity range and options

FH45HC - F50HC - F62HC

Cubic light industrial air coolers

Dimensions

F45HC, F50HC

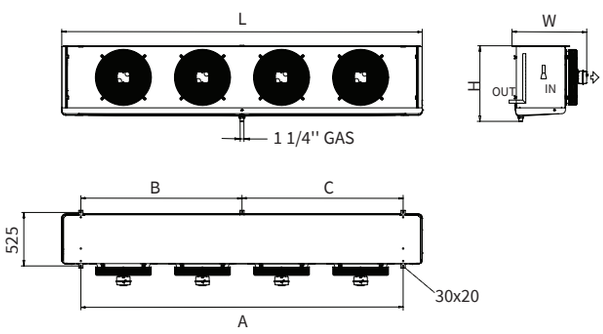

F62HC

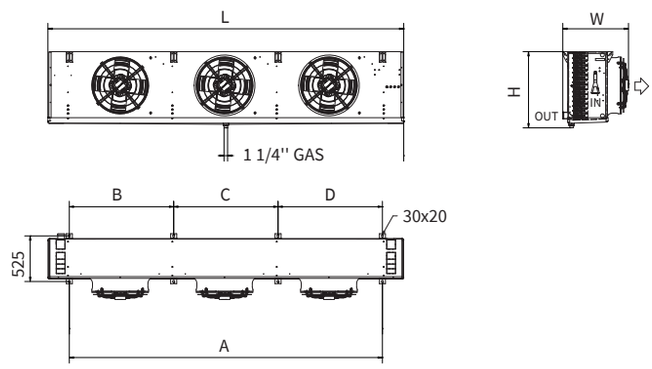

Model		n. of fans	Dimensions (mm)					
			L	A	B	C	W	H
F45HC	**00 **02	1	1290	800	800	-	675	660
F45HC	**06 **08	2	2090	1600	1600	-	675	660
F45HC	**12 **14	3	2890	2400	2400	-	675	660
F45HC	**18 **20	4	3690	3200	1600	1600	675	660
F50HC	**00 **02	1	1290	800	800	-	730	880
F50HC	**06 **08	2	2090	1600	1600	-	730	880
F50HC	**12 **14	3	2890	2400	2400	-	730	880
F50HC	**18 **20	4	3690	3200	1600	1600	730	880

Model		n. of fans	Dimensions (mm)						
			L	A	B	C	D	W	H
F62HC	**06 **08	2	2890	2400	1200	1200	-	755	880
F62HC	**12 **14	3	4090	3600	1200	1200	1200	755	880

Selection

Selection and pricing is to be performed with our air heat exchanger selection software Refriger.
Selection output includes all relevant technical data and dimensional drawings.

Certifications

The LU-VE Exchangers quality system is in accordance with ISO 9001. All products are manufactured according to PED regulations. LU-VE participates in the ECP program for HE. Check ongoing validity of certificate*:
www.eurovent-certification.com

Check ongoing validity of certificate:www.eurovent-certification.com
EUROVENT CERTIFIED PERFORMANCE
www.eurovent-certification.com

*Brine refrigerant is not covered by Eurovent certification

Code description

F45	H	C	*	1100	N	4	*	*
1	2	3	4	5	6	7	8	9

1 Air cooler (F45=Ø 450 mm, F50=Ø 500 mm, F62=Ø 630 mm)
2 Hitec® technology
3 Cubic light industrial
4 Application (blank=direct expansion, W=brine)
5 Model type
6 Defrost system (N=air defrost, E=electric defrost, G=hot-gas defrost)
7 Fin spacing (4=4.5, 6=6.0, 7=7.5, 10=10.0 mm)
8 Circuit code - only for brine units
9 Options

LU-VE GROUP leadership with passion